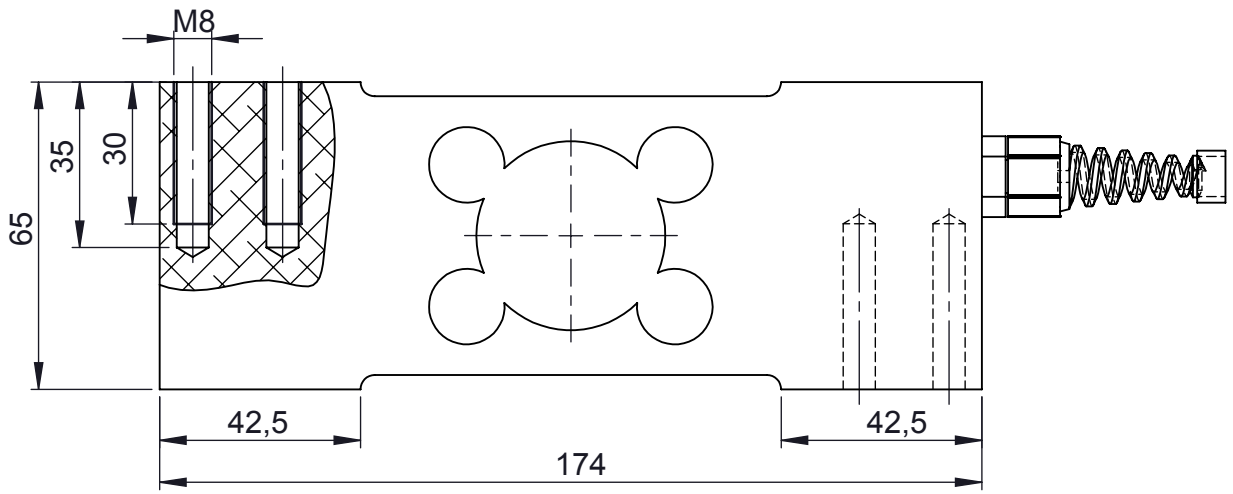

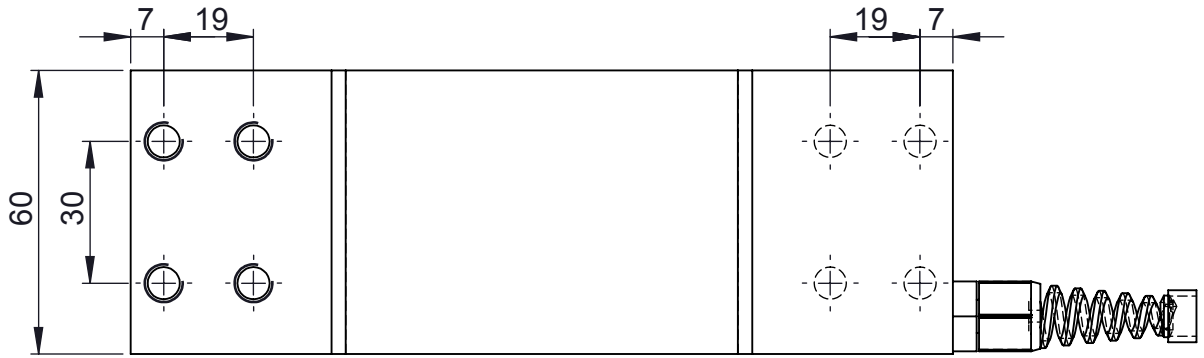

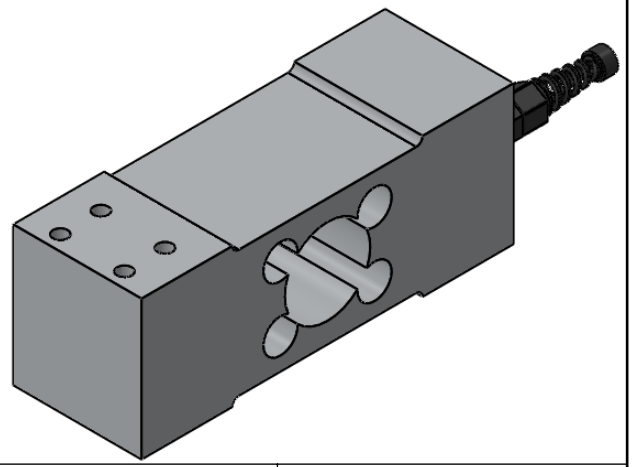

Model	Capacity(kg)	Material	Weight(kg)
SPA 600 (C1-C3)	600	Aluminium	1,6

DRAWN BY: D.GÜNAYDIN

CONTROL:V.AKGÜN

REVISION							DATE
A	B	C	D	E	F	G	08/04/2013

ESİT® LTD.

www.esitscale.com

DESCRIPTION:

BRAND :ESİT
MODEL :SPA