Y3-160M-B3
Mounting diagram

GUANGLU MOTOR
GUANGLU

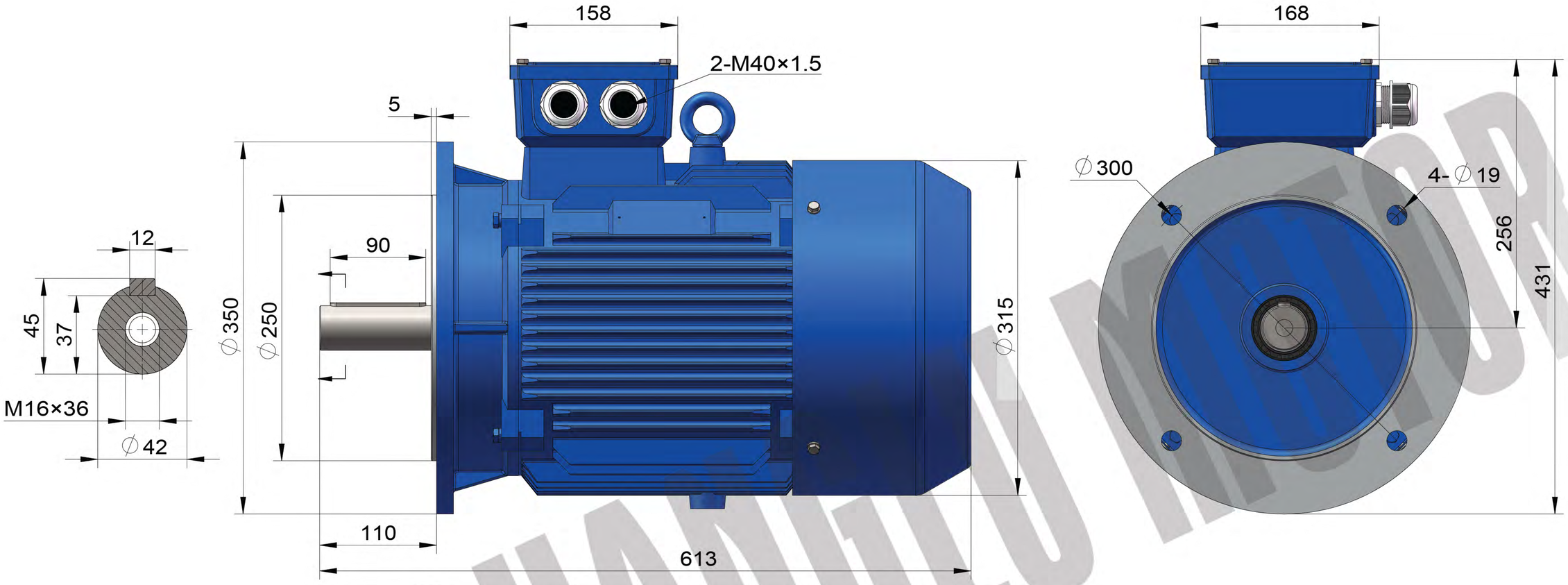

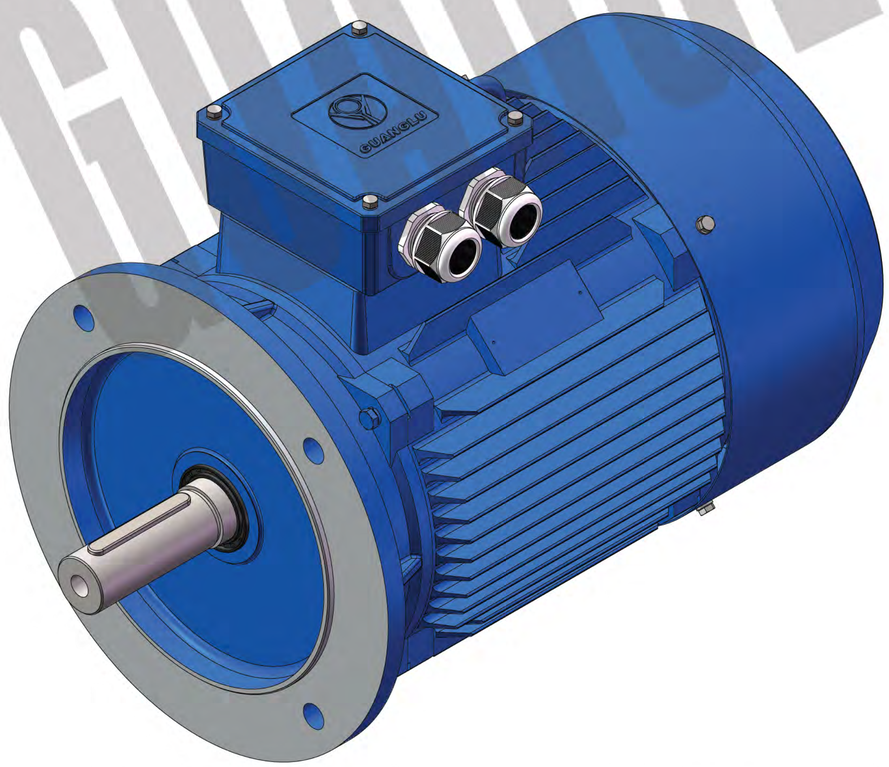

Y3-160M-B5
Mounting diagram

GUANGLU MOTOR

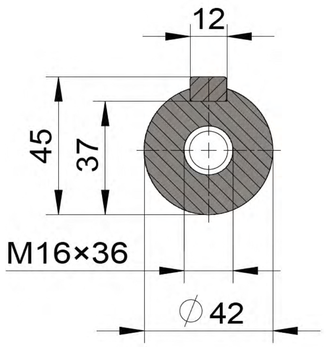

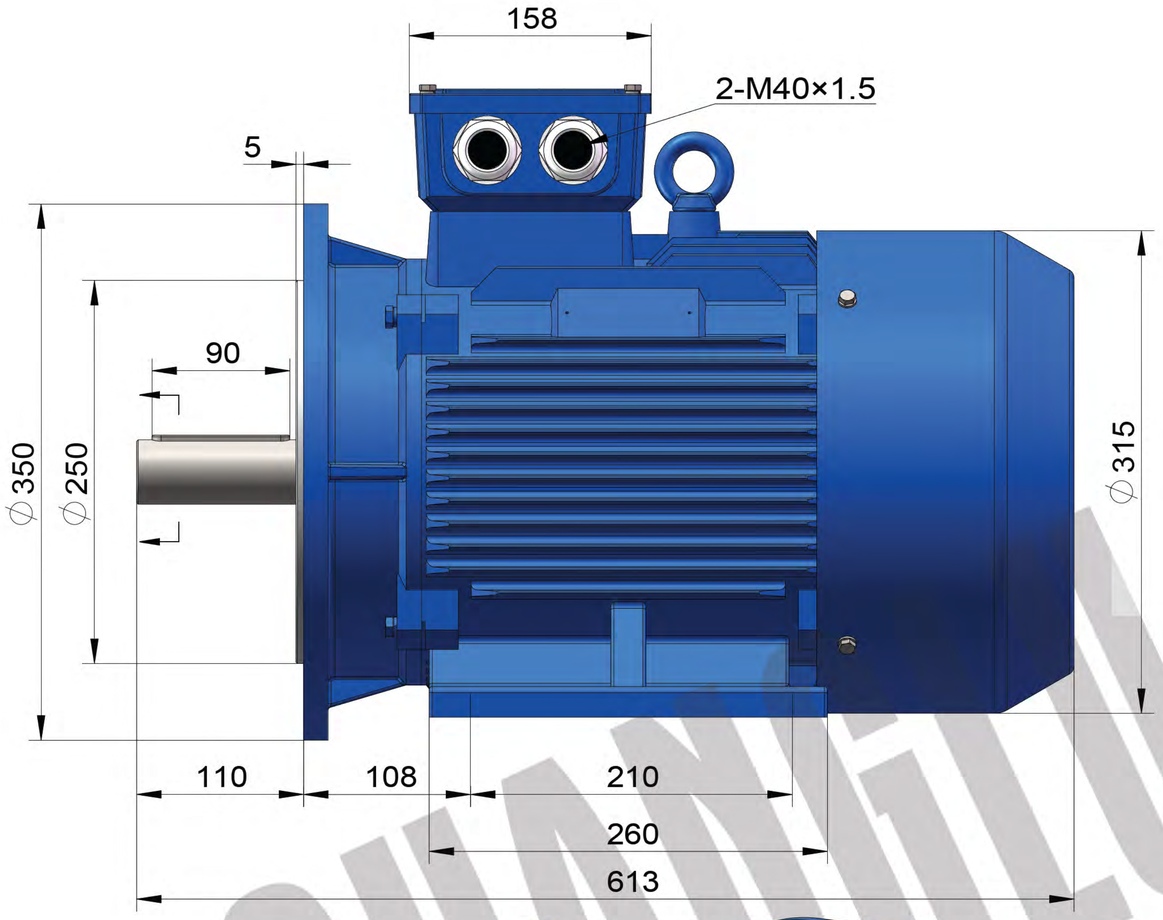

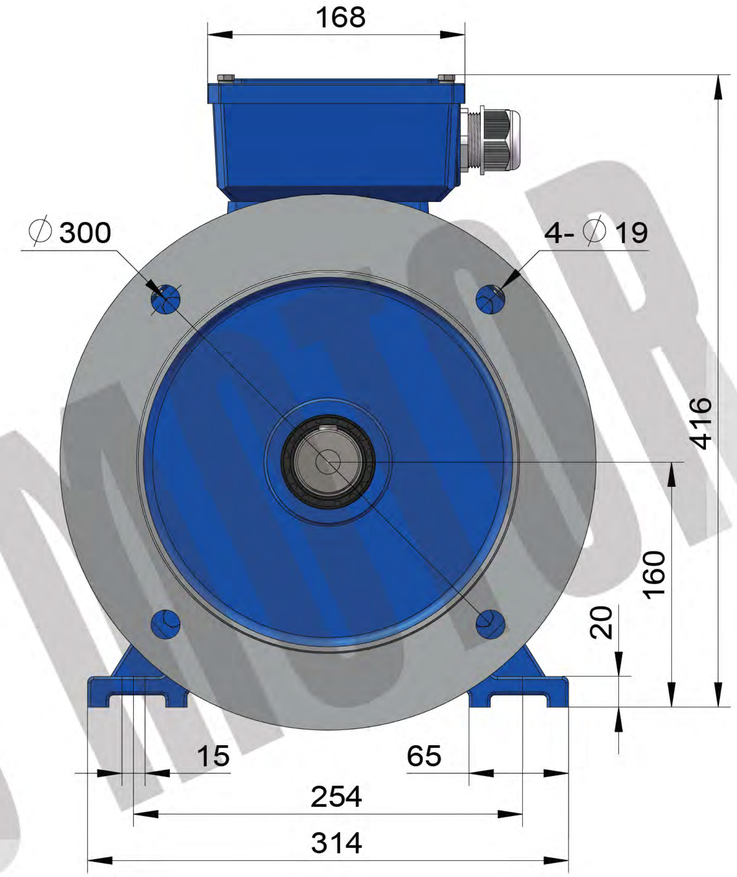

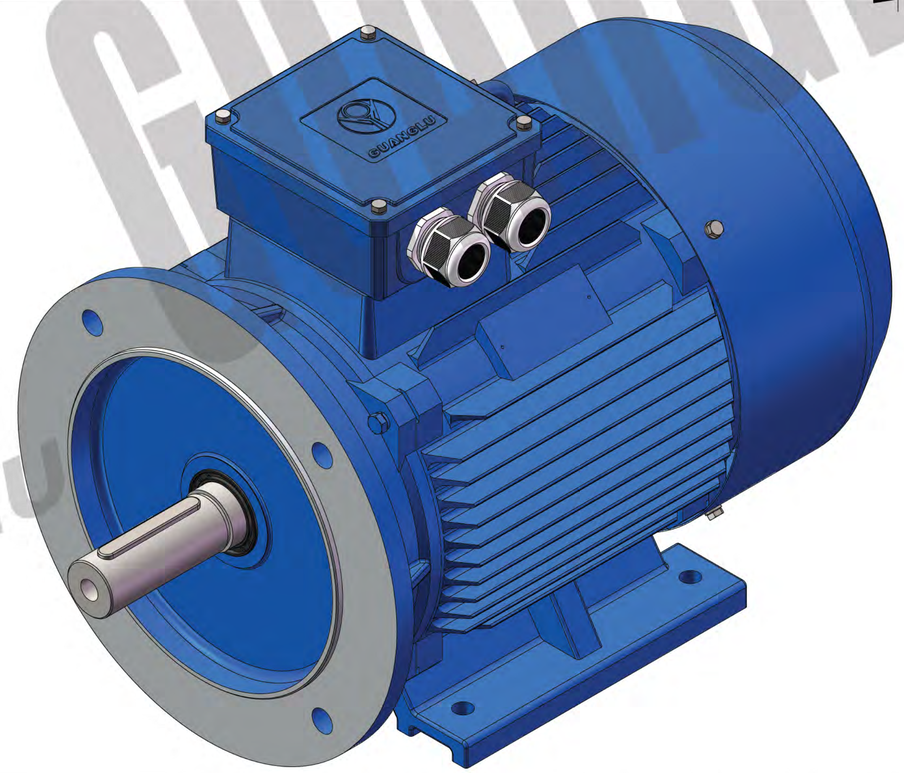

Y3-160M-B35
Mounting diagram

GUANGLU MOTOR
GUANGLU

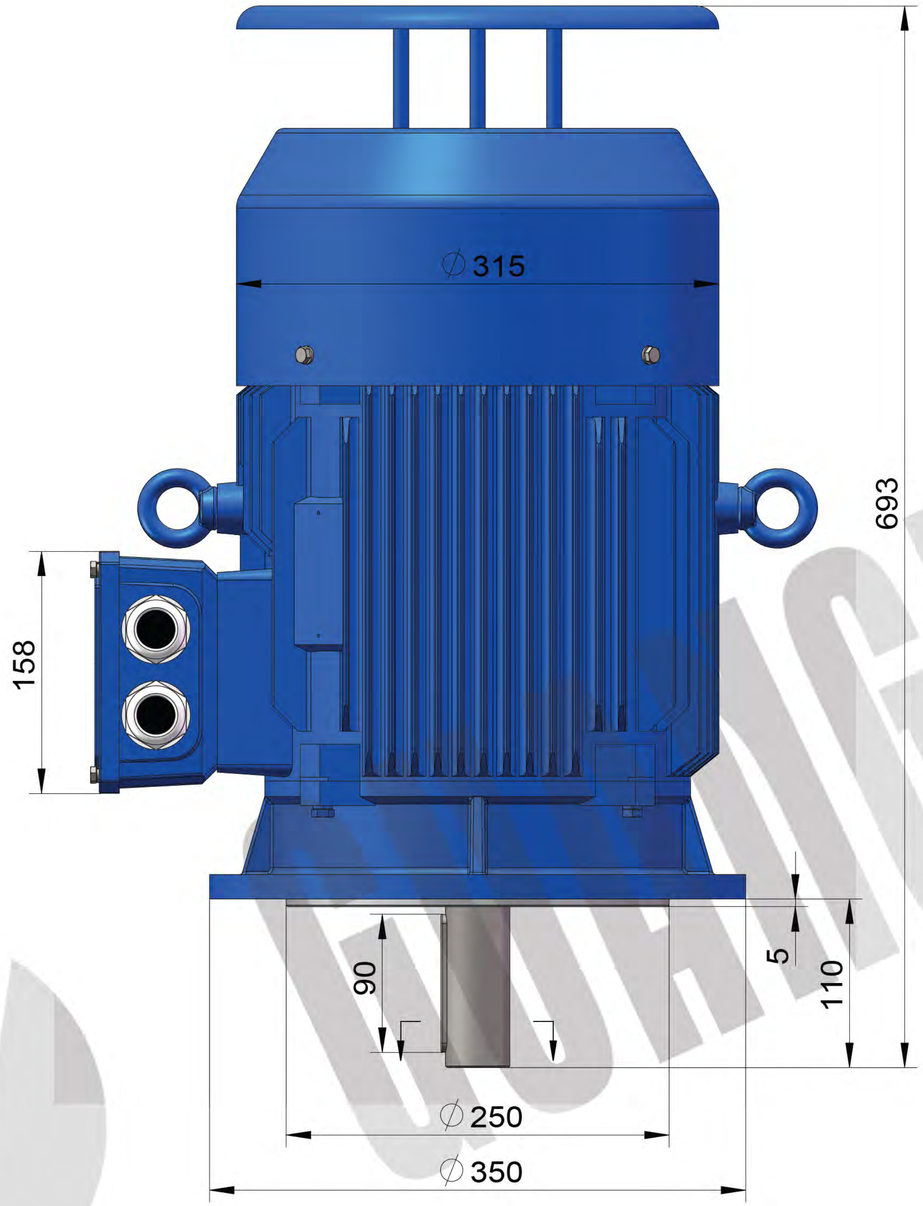

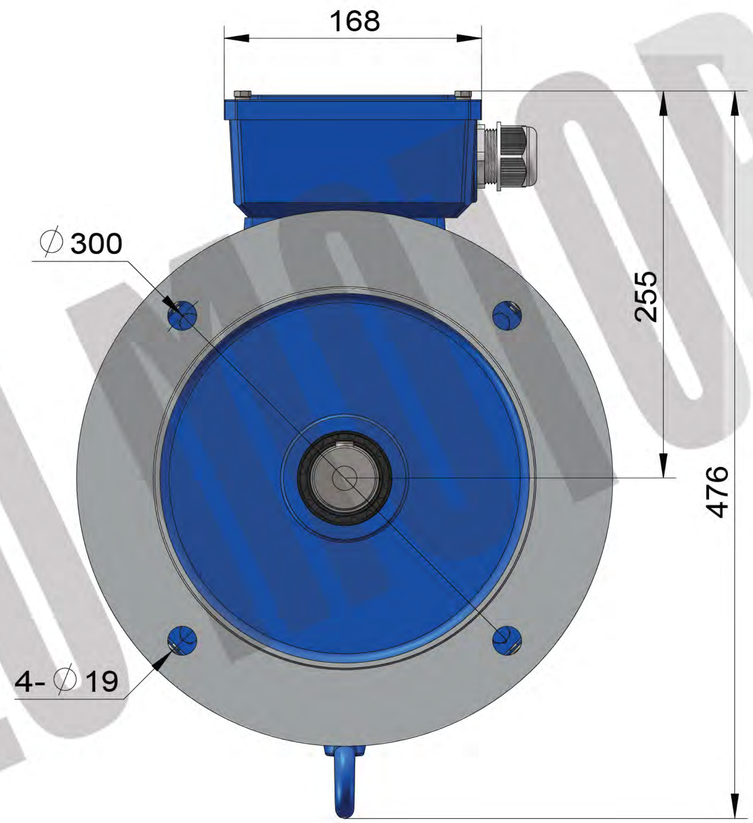

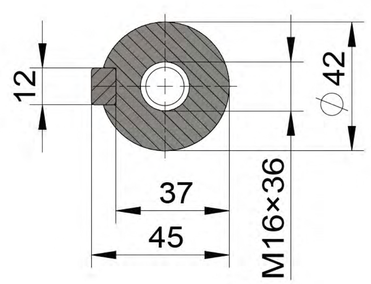

Y3-160M-V1
Mounting diagram

GUANGLU MOTOR
GUANGLU